SANYO MACHINE WORKS, LTD.

Sanyo machine works
Machine Vision
Nutrunner System

6D Fastening Position Detecting System



Machine Vision Nutrunner System

SMVS new release

6D Fastening Position Detecting System

SMVS Machine Vision Nutrunner System is a system, which can be tightened under the condition only when tool goes in a designated position and range by checking the tool position with an equipped camera, then using measure position (X, Y, Z) and posture (Roll, Pitch, Yaw).

Feature

- High accuracy

  Detecting accuracy is ±10mm.
  (When the distance between the measurement position and the camera position is 1m, the square measurement is 1m^2 accuracy.
  Accuracy depends on the measurement environment and condition.)

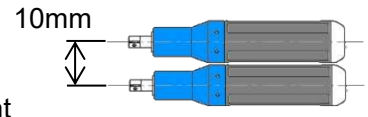

- Available for multiple models

  Up to 64 pattern models are available, and each model can be set up to 64 positions and different fastening conditions.

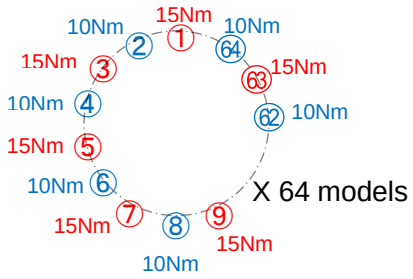

- 6D position and posture detection

  Height can be detected even if X and Y are in the same position since detecting not only X and Y positions but also Z.

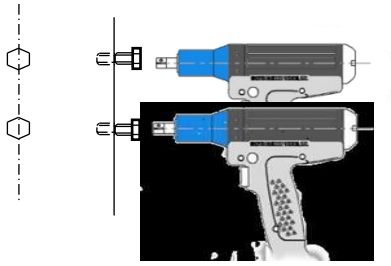

- Inclined tool detection

  Monitoring the tool posture can prevent a misjudging position even if the tool is inclined.

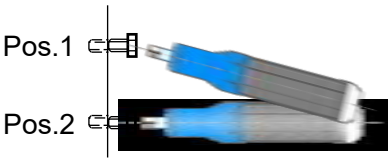

- Cross-thread prevention

  Monitoring the tool posture can also prevent a cross-thread fastening due to being inclined.
  Approach angle can be set against whatever a tap with angle.

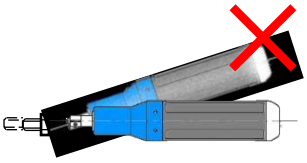

6D Fastening Position Detecting System

- User-friendly installation

  Easy installation is allowed since the measurement can be performed with one camera.

  As the camera can be calibrated beforehand, the installation time at the site will be shortened.

- Up to extra cameras connectable (OPTION)

  If the camera has a blind spot and a lack of area, the fastening position can be detected by connecting up to two cameras.

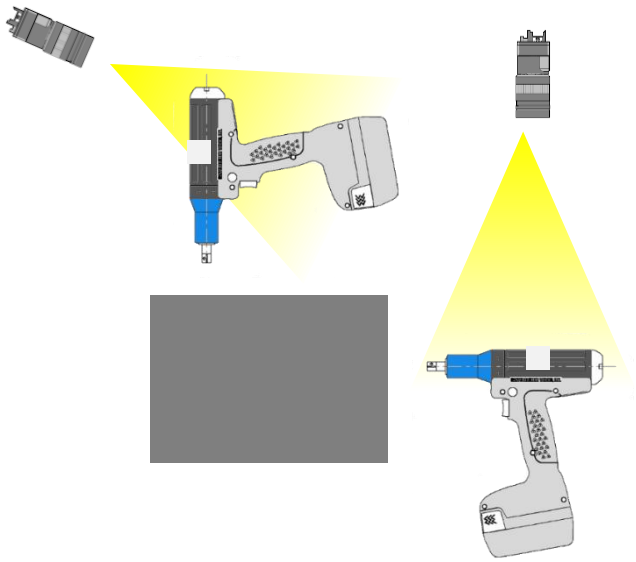

- Easy setting

  Position setting and program selection can be easily operated by the full-color touch screen of the Vision Controller.

- Wide variety of interfaces

  Vision Controller supports a wide variety of external interfaces.

  Various field networks such as CC-Link, CC-Link IE, Ethernet I/P, Digital I/O (sink or source) input/output 8 points each, etc. can be performed.

6D Fastening Position Detecting System

System Block Diagram

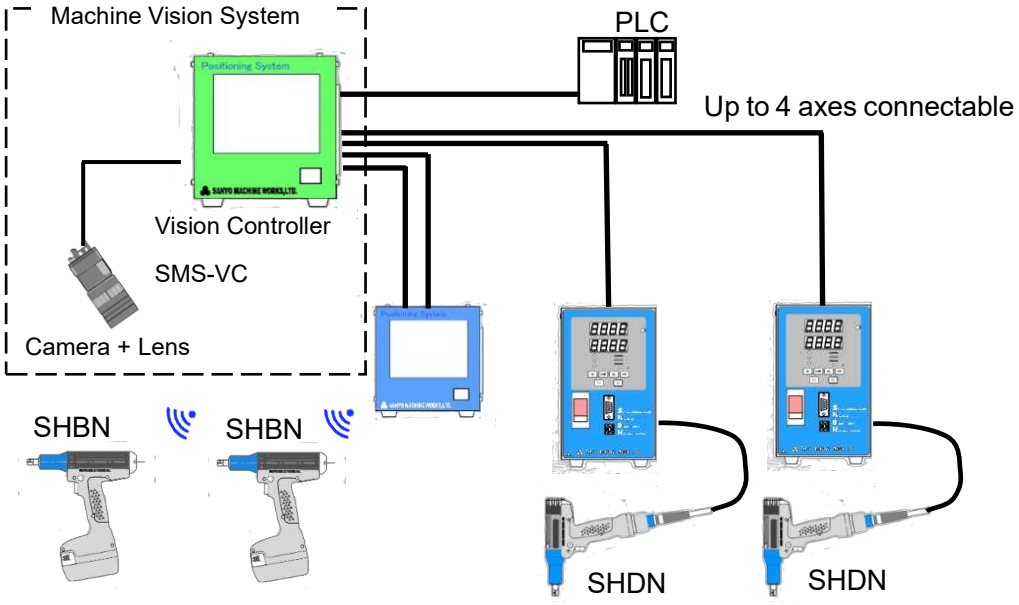

Product specifications

・System Model

System Model is composed of following combination. SMVS (1) – 2 – 3

System Model information		
1	Number of cameras	T1 = One Camera T2 = Two cameras
2	Number of pixels	V16A = 1.6M pixels V31A = 3.1M pixels
3	Focal length of lens	L08A = 8mm L12A = 12mm
Example) SMVS(T1)-V16A-L08A : One Camera 1.6M pixels + Focus 8mm		

・Vision Controller

Item	Specification
Model	SMS-VC
Interface	I/O (Input / Output 8points each) x 2 ports (Up to 4 ports by option.) RS232C x 2 ports (Up to 4 ports by option) Field Network (Option)
Supply Voltage	AC100 to 240V Single phase 50/60Hz (AC adapter)
Max consumption electric power	360W
Weight	1.3kg

・Camera

Item	Specification
Model	SMS-V16A / -V31A
Pixels	1.6M / 3.1M

・Lens

Item	Specification
Model	SMS-L08A / -L12A
Focal length	8mm / 12mm

SANYO MACHINE WORKS, LTD.

JQA-QM3832

CM009

SANYO MACHINE WORKS, LTD.
No.1 Oka, Okimura, Kitanagoya, Aichi, Japan TEL : (0568)21-1111 FAX : (0568)23-4711
●URL : http://www.sanyo-machine.co.jp ●e-mail : west-japan-sales@sanyo-machine.co.jp

SANYO MACHINE AMERICA CORPORATION
950 S.Rochester Rd., Rochester Hills, Michigan 48307 U.S.A. TEL : 248-651-5911 Fax : 248-651-5915
●URL : http://www.sanyo-machine.com ●e-mail : sales@sanyo-machine.com

SANYO CANADIAN MACHINE WORKS, INC.
33 Industrial Drive, Elmira, Ontario, N3B 3B1 Canada TEL : 519-669-1591 Fax : 519-669-5346
●URL : http://www.sanyomachine.on.ca ●e-mail : sales@sanyomachine.on.ca

SIAM SANYO MACHINE WORKS LTD.
777/24 Moo 9, Bangpla,Subdistrict Bangplee District, Samutprakarn 10540 Thailand TEL:02-136-5901 FAX:02-136-5902

* The above-mentioned specification may be changed without prior notice.

SMVS-P1.0-E 2023.04